115-P80-MZ4
Pressure Balance Shower Trim
Requires SS-PB75 Pressure Balance Valve

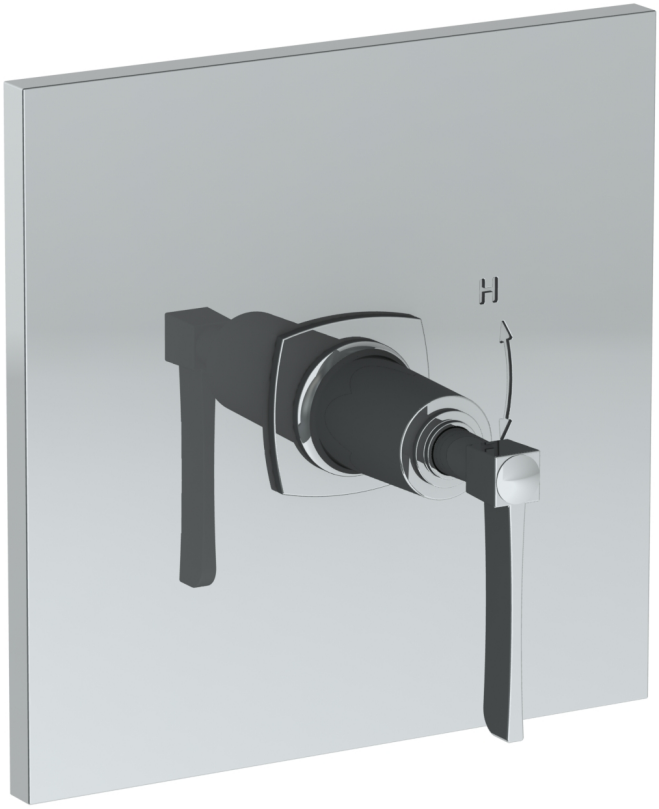

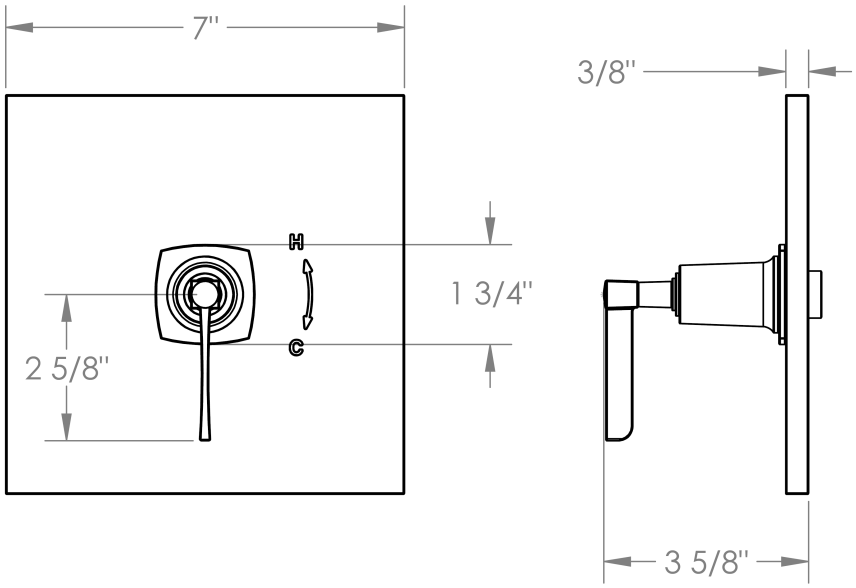

WATERMARK DESIGNS 1/29/2018
350 Dewitt Ave Brooklyn NY 11207 USA T 718 257 2800 F 718 257 2144 info@watermark-designs.com

115-P80-MZ5
Trim Kit for Wall Mounted Pressure Balance Valve
For use with SS-PB75 concealed rough

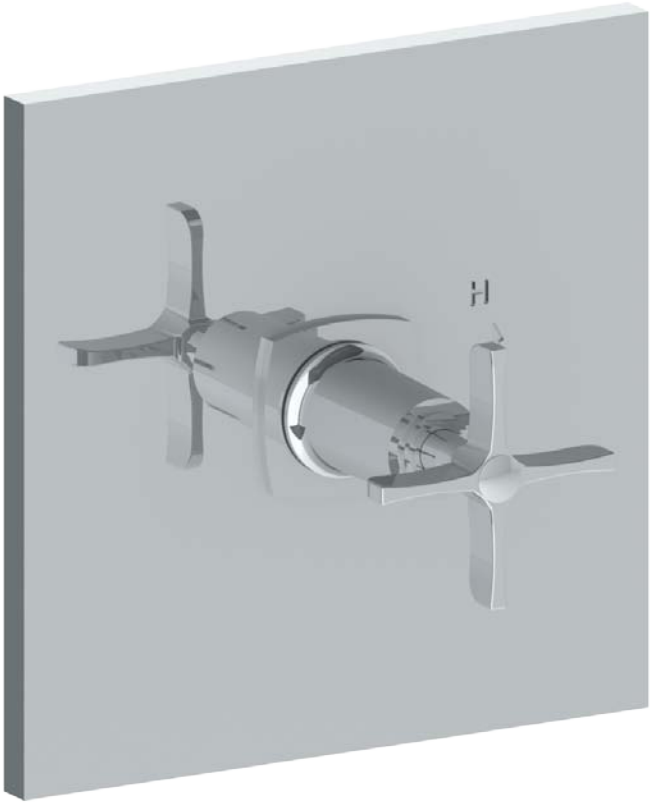

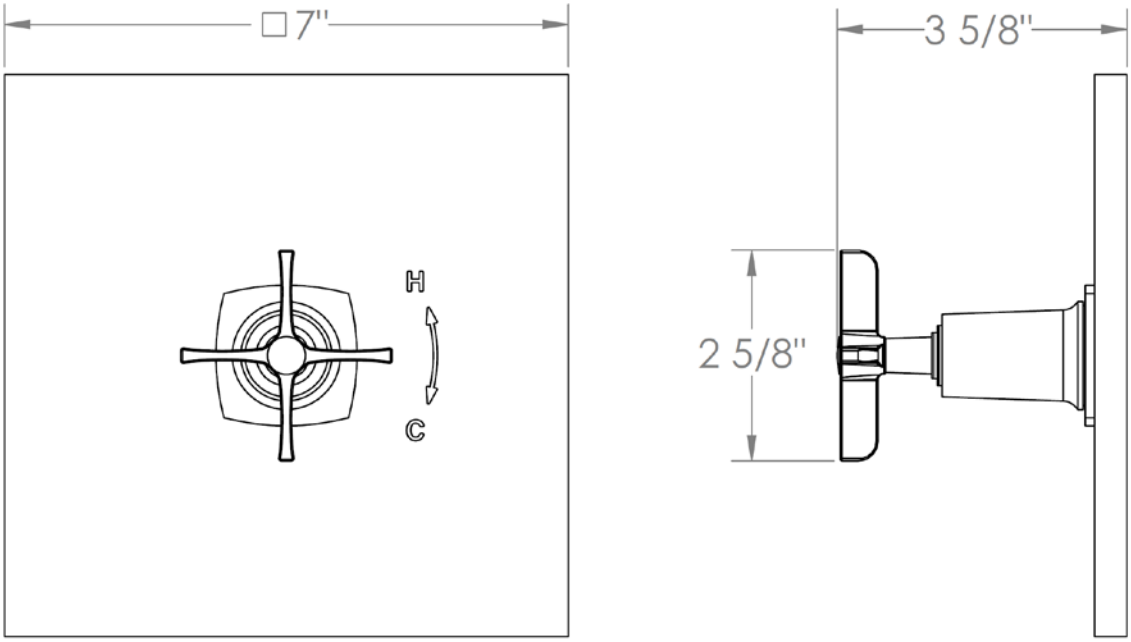

350 Dewitt Ave Brooklyn NY 11207 USA T 718 257 2800 F 718 257 2144 info@watermark-designs.com